Single Page Dice Tower

© 2008 Russel Howell

The Single Page Dice Tower Assembly Instructions

CUTTING GUIDE

CUT along SOLID lines
SCORE and FOLD on DASHED lines
GREY represents areas to be cut away and discarded.

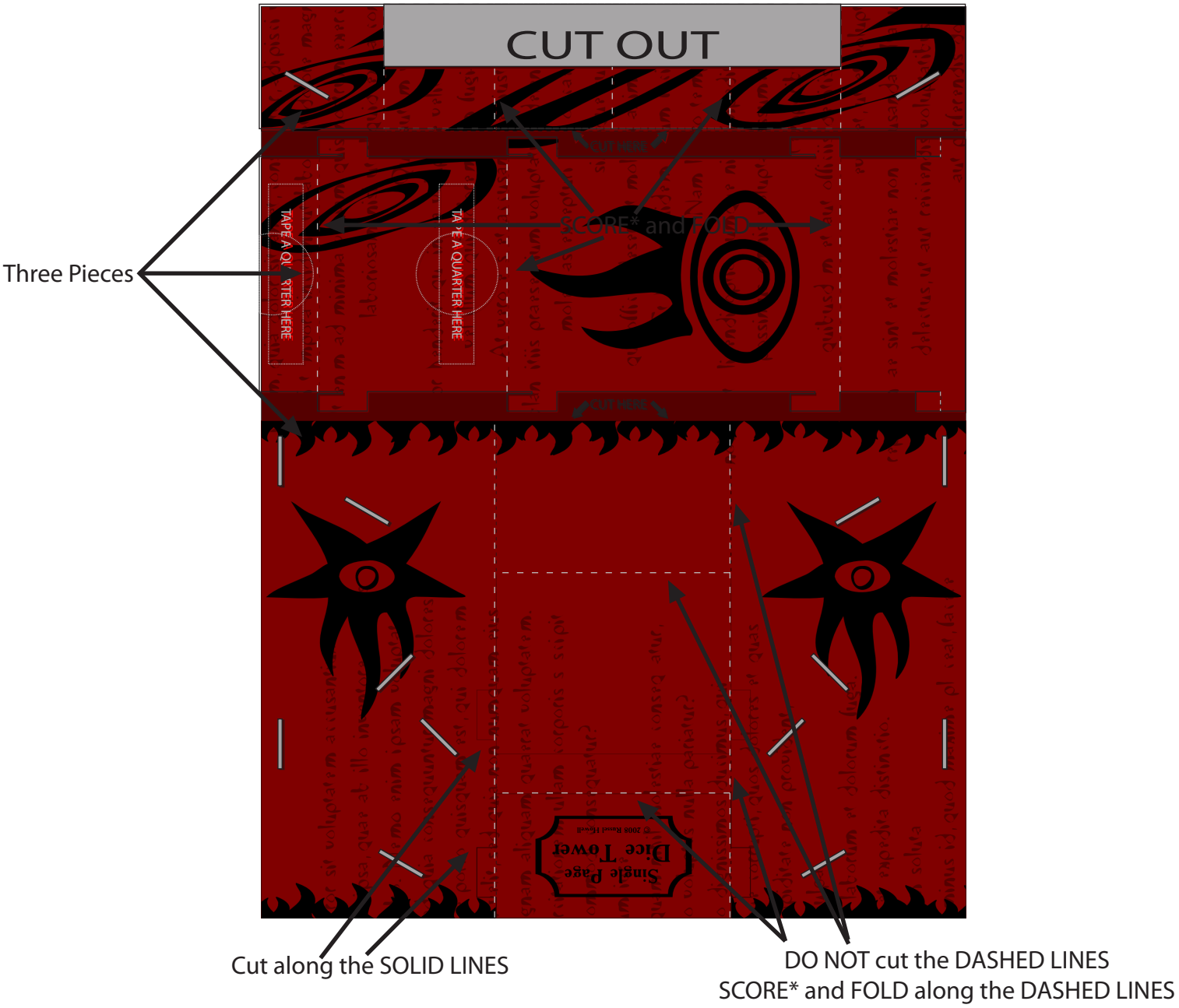

*To score is to create a line or depression in the paper that will help the paper fold.
Lightly run a sharp object along the line. DO NOT CUT THE PAPER IN THE PROCESS.

Designed for 8.5" x 11" paper. Use a piece of at least 65 lb cover (175 g/m2) cardstock for best results.
Select borderless printing, on supported printers, for easier cutting.
Tower does not support more than 8 or 9 small or 5 to 6 medium sized dice at a time with the option dice stop.

Rev. 1.1 - July 29, 2008

The Single Page Dice Tower Assembly Instructions

FOLDING AND ASSEMBLY

Score* and FOLD along DASHED lines

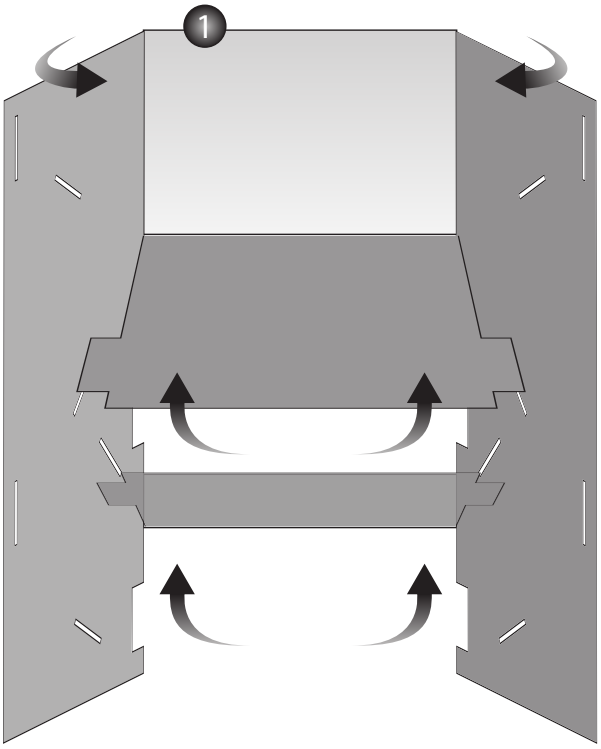

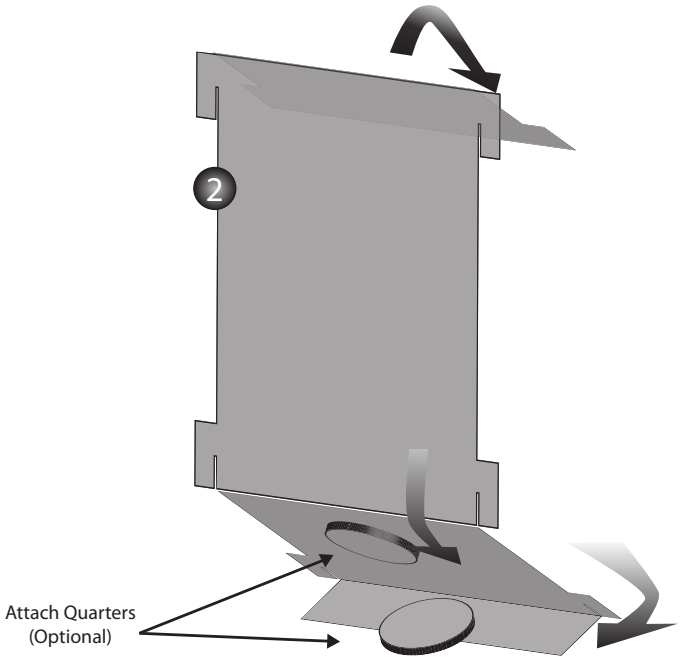

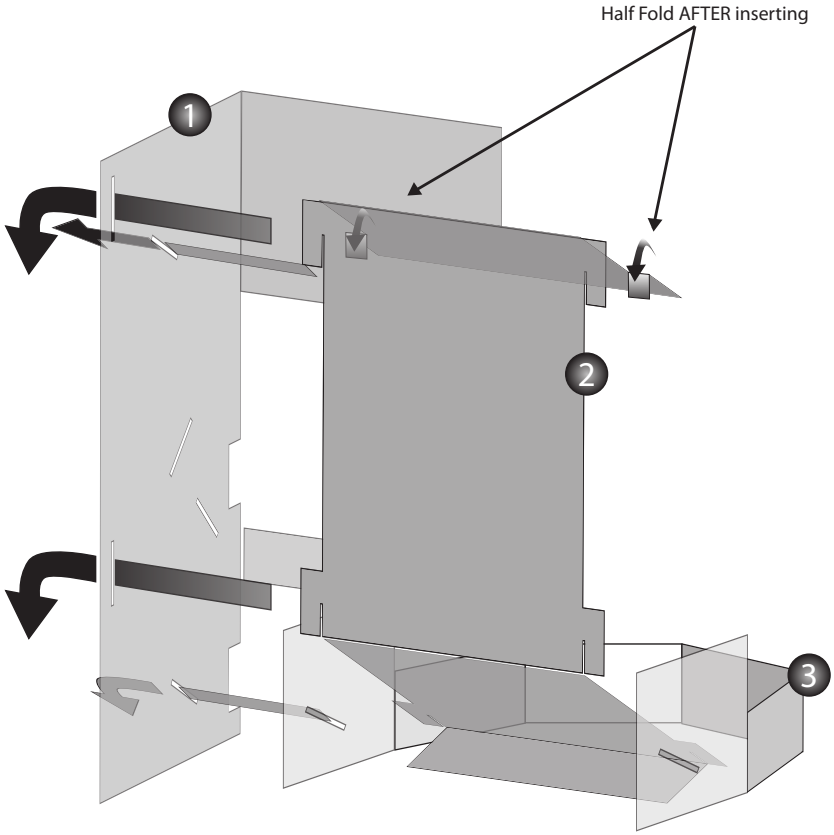

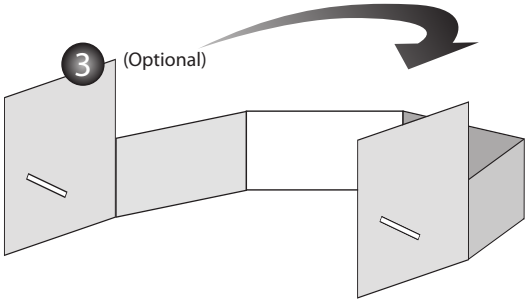

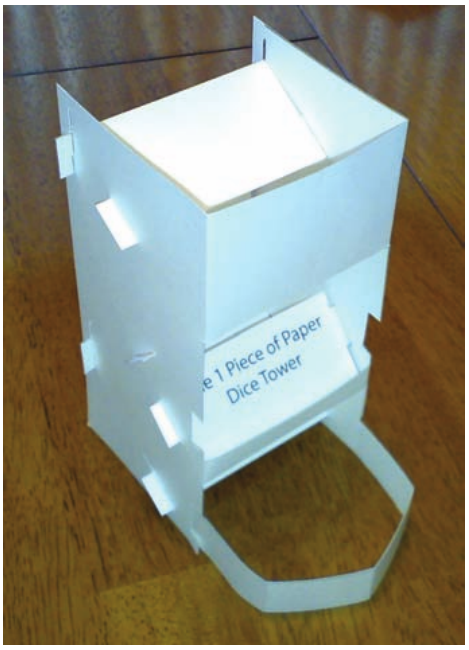

Rev. 1.1 - July 29, 2008